Postal address
P.O. Box 173
3770 AD Barneveld (NL)

Visiting address
Grote Bosweg 1
3771 LJ Barneveld (NL)

+31 (0) 342 44 10 50
info@boschbeton.com
boschbeton.com

TYPE **LR100H**

Dimensions

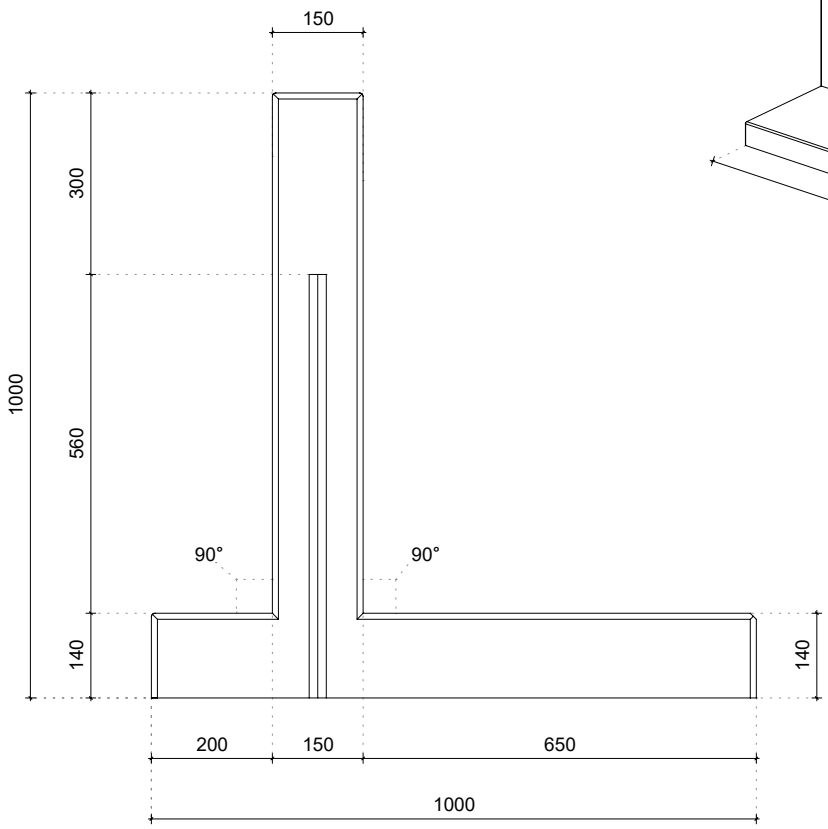

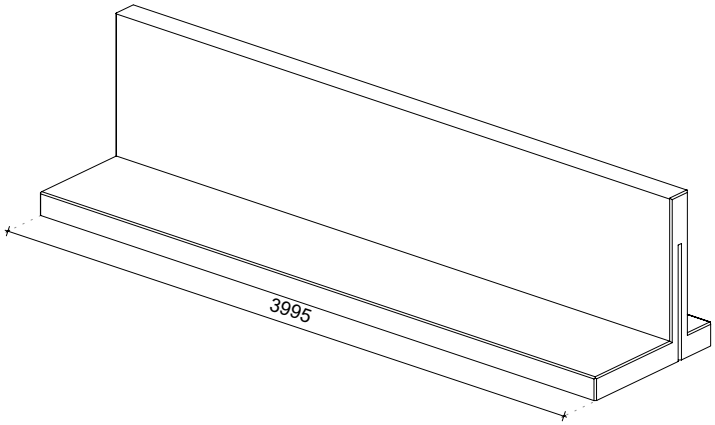

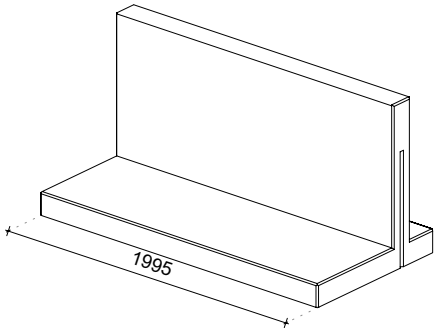

Details

Rounded top edge

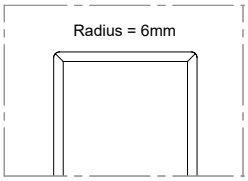

Groove for joining strip

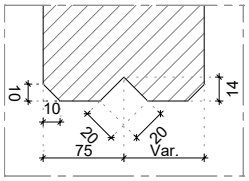

Element connection

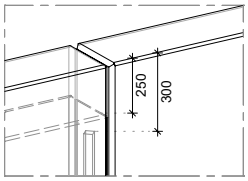

Technical details

Concrete mixture	2nd Generation self-compacting C60/75
Reinforcement steel	B500
Weight	2619kg (L = 3995mm) / 1309kg (L =1995mm)
Concrete cover	45mm
Dimensional tolerance	+/- 5mm
Concrete suface finish	All visible sides class A (B1 on request)
Design life	100 years
Product warranty	10 years
Environmental class	XA3, XC4, XD3, XS3, XF4
Hoisting device	None, to be placed with clamp

Constructed according to

EN 1990 Eurocode 0
EN 1991 Eurocode 1
EN 1992 Eurocode 2
EN 1997 Eurocode 7
EN 206
Incl. national addendums

Produced method

Energy neutral

Filtered rainwater

Sustainable raw materials

Recyclable materials

Certification

V3.0 24.7.2023